Owner's Manual

Colebrook

Chaise Lounge

Stock# BH17-092-099-99(Blue)
BH17-092-097-12(Red)
BH17-092-097-16(Tan)

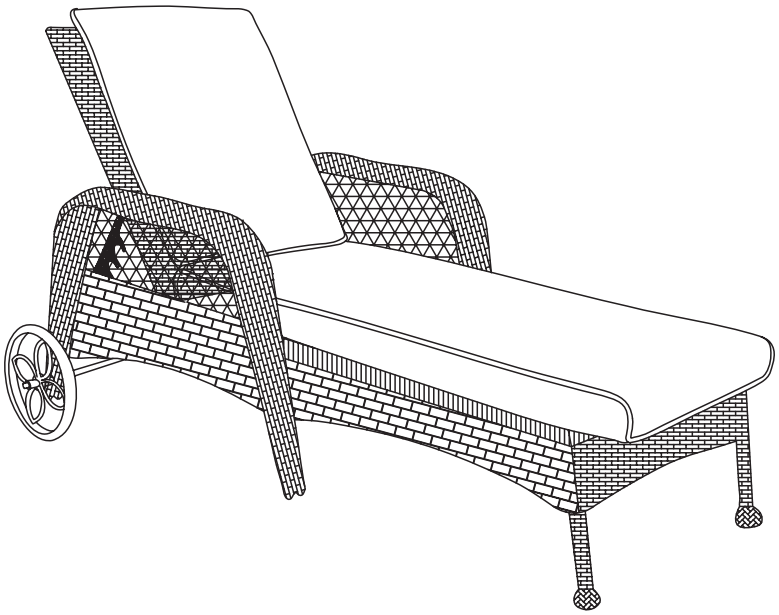

If you encounter any problems with this product:

o DO NOT RETURN IT TO THE STORE
o Email: customerservice@leisuregardenfurniture.com
o Call our customer service hot-line at 1- 877- 877-1235
8:00am - 4:00pm (PST), Monday- Friday

Warranty

You must retain the original receipt to obtain warranty service.

All structural frames produced from cast and/or tubular aluminum, steel, and wrought Iron.
All furniture manufactured and sold by Pasco Enterprises Ltd. is warranted to the original purchaser against defects in workmanship and materials. If a product manufactured by Pasco Enterprises Ltd. fails during the first year from date of purchase under the terms of our limited warranty, Pasco Enterprises Ltd. will replace the item at no charge. After (1) year it will be the original purchasers' responsibility to pay for freight and packaging. Pasco Enterprises Ltd. reserves the right, in the case of discontinued or out of production models, to replace with an item of similar quality and style (glass breakage is not warranted).

Frame (Cast, Extruded Aluminum): (5) Years
Frames are warranted against defects in materials and workmanship for a period of five years from the date of original purchase. Damage to frames or welds due to commercial use, improper assembly, exposure to water and sub-freezing temperatures, and/or abuse is not covered, please refer to care and maintenance information for proper cleaning instructions.

Frame (Steel, Wrought Iron): (3) Years
Wrought Iron and steel furniture is warranted for (3) years from the original purchase date against defects in manufacturing and/or workmanship. NOTE: Steel and wrought iron are not warranted for rust, corrosion, or rust staining.

Fabric: (1) Year if applicable
Fabric on cushions, slings, and umbrellas is warranted against separation at the seams for a period of (1) year. Fading, mildew, and discoloration due to exposure to elements, chemicals, and spills are not covered, please refer to care and maintenance information for proper cleaning instructions.

Powder Coat and/or Paint: (1) Year
The powder coat and/or paint are warranted against blistering, peeling, or cracking for a period of one year. Fading resulting from exposure to elements, chemicals, and spills is not covered. Scratches and chips due to normal wear and use are not covered, please refer to care & maintenance information for proper cleaning instructions.

Resin Wicker Weave and/ or Vinyl Strap: (1) Year
Weave and/or straps are warranted against breakage, separation, or tearing for one year. Fading or discoloration due to exposure from chemicals, spills, and/or the elements is not covered, please refer to care & maintenance for proper cleaning instructions.

Umbrella: (1) Year if applicable
Umbrella frames are warranted for one year against manufacturer's defects in workmanship and materials. Umbrella bases are not covered, please refer to care & maintenance instructions for proper cleaning information.

Freight & Packaging: (1) Year
Pasco Enterprises Ltd. will be responsible for shipping, handling, and packaging charges for the first year for all valid warranty claims. These charges are the sole responsibility of the claimant after the first year. Shipping is limited to USA only.

Warranty Exclusions:

Products used for commercial, contract, or any other non-residential purposes. Furniture is sold "as is",

display models and/or clearance items.
Warranty exclusions include: freight damage, damage due to acts of nature, fire, abuse, vandalism, lack of proper care and maintenance, fading cushions, slings, umbrellas, and coatings. Glass breakage, table top damage, hardware corrosion & rust, freeze damage, and improper assembly are not covered or warranted. We reserve the right to substitute similar quality and style merchandise/furniture if the model in question is out of stock or production.
NOTE: Rust, corrosion, and/or rust stains are not covered by Warranty.

Glass/ tile/ GRC is replaceable within one year after purchase, excluding glass/ tile/ GRC breakage that is caused by unreasonable or abusive use, fire, freight damage, acts of nature, accidental damage, repair or modifications by customers.
Warranty covers free replacement of item within one year of purchase. If after 1 year of purchase, customer will need to pay freight for replacement item.

Lack of original receipt will void warranty service.

Care & Maintenance

Never allow water to build up in frames as this will cause corrosion and freeze damage in cold climates. Wash all frames with a solution of mild soap and water. Rinse with clean water and dry with a soft absorbent cloth towel. Frames can be treated with a liquid wax for maximum protection against UV rays and/or salty damp air. If your set includes cushions, slings, and/or an umbrella they may be cleaned by hand with a solution of soap & water with a clean water rinse, never machine wash cushions, slings, or umbrella covers as this will result in shrinkage or damage.
After cleaning cushions, tip on end and allow to dry, never use a commercial or home dryer to tumble dry fabric goods.
Do not use bleach or solvents to clean any product. This will void the warranty.

Customer Service:

- **Email: customerservice@leisuregardenfurniture.com**
- **Phone: 1-877-877-1235**
- **Hours of business: 8:00am - 4:00pm (PST) Monday – Friday**

Parts List

Ref.	Descriptio	Illustration	QTY	Ref.	Description	Illustratio	QTY
A	Back Panel		1	A5	Bolt (1/4"x0.787"L)		4
B	Seat Panel		1	A12	Bolt (1/4"x1.969"L)	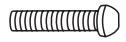	2
C	Right Arm		1	D3	Hex Wrench (5/16")		2
D	Left Arm		1	G1	Washer(1/4”)		10
E	Cushion		1	C1	Allen Wrench (1/4”)		1
F	Axle		1	J2	Nut Cover (5/16")		2
G	Axle Sleeve		1	I5	Locknut (5/16")	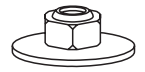	1
H	Wheel		2	H3	Plastic Washer (6mmT)	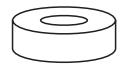	2
A7	Bolt (1/4"x1.181" L)		4	H6	Plastic Spacer (Φ12.5xΦ2.0T)		4

Assembly Instructions

CAUTION:
Read all the instructions before assembly. Failure to do so may result in faulty assembly and potential injury!

- Assemble product on a soft, non-abrasive surface such as carpet or cardboard to avoid damaging the item.
- Two people required to assemble heavy item. After final alignment, make sure all bolts are securely tightened with caps pressed in place.
- Remove the parts from the carton and take off all protective material. Identify all parts packed in the carton against the parts list.

WARNING: Do not tighten bolts until product is completely assembled.

Step 1 – Attach the front right arm (C) to the seat panel (B) by using bolt (A7) and washer (G1).

Hardware Used	
Bolt (A7)	2pcs
Washer (G1)	2pcs

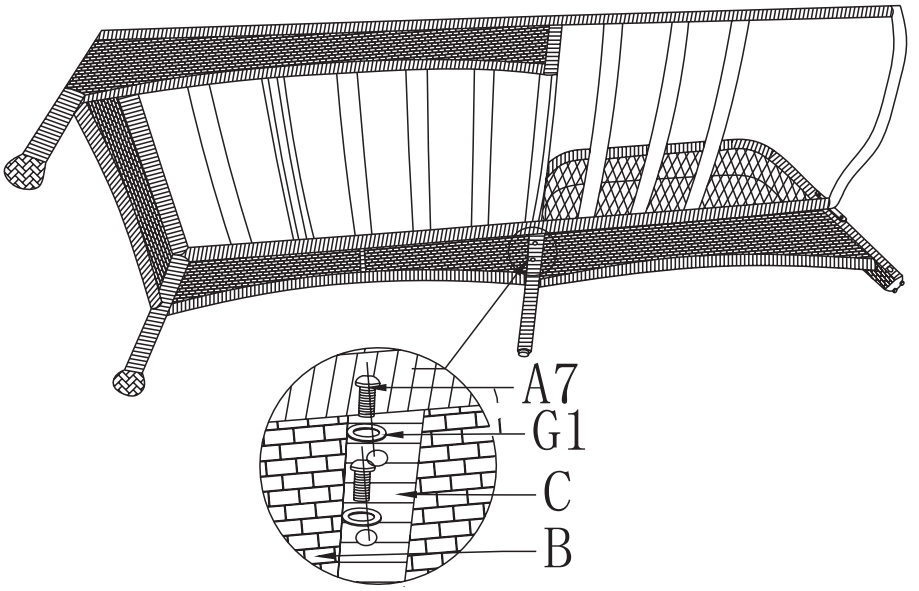

Step 2 – Attach the back right arm (C) to the seat panel (B) by using bolt (A5) and washer (G1).

Hardware Used	
Bolt (A5)	2pcs
Washer (G1)	2pcs

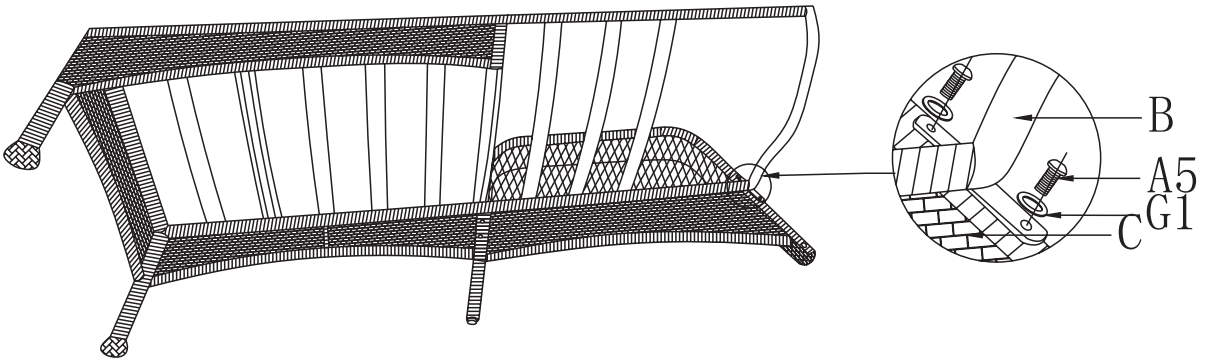

Step 3 – Attach the front left arm (D) to the seat panel (B) by using bolt (A7) and washer (G1).

Hardware Used	
Bolt (A7)	2pcs
Washer (G1)	2pcs

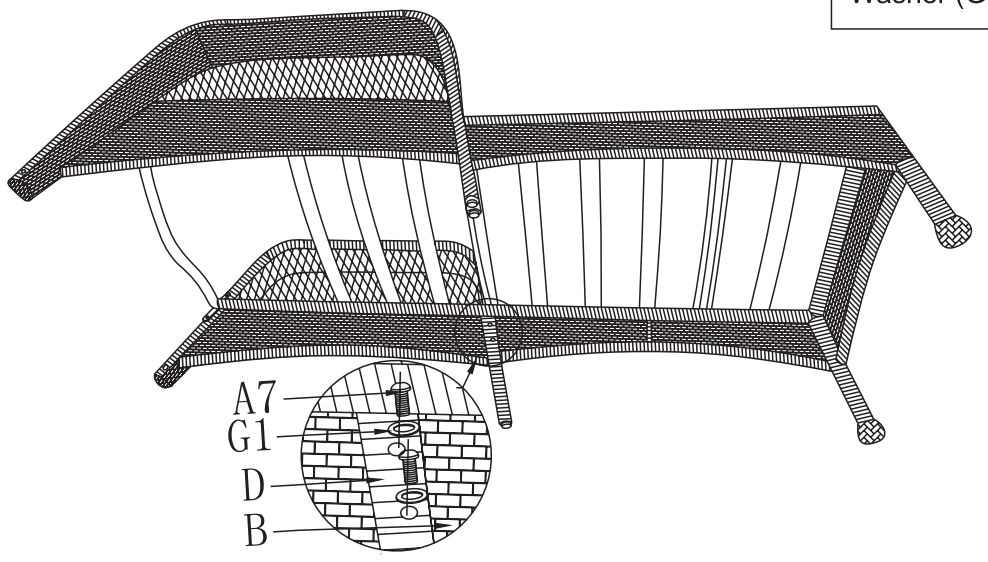

Step 4 – Attach the back left arm (D) to the seat panel (B) by using bolt (A5) and washer (G1).

Hardware Used	
Bolt (A5)	2pcs
Washer (G1)	2pcs

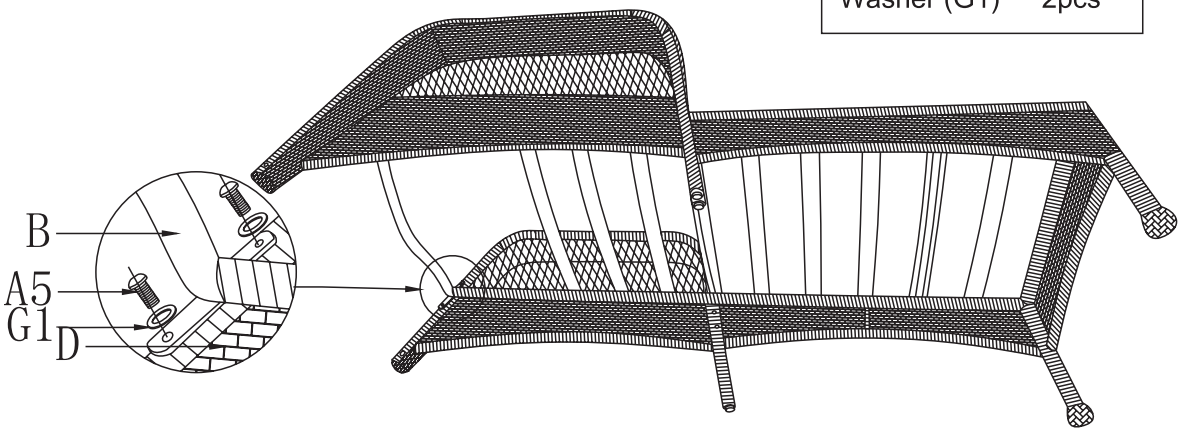

Step 5 – Attach the back panel (A) to the seat panel (B) by using bolt (A12), washer (G1) and plastic washer (H3).

Hardware Used	
Bolt (A12)	2pcs
Washer (G1)	2pcs
Plastic Washer(H3)	2pcs

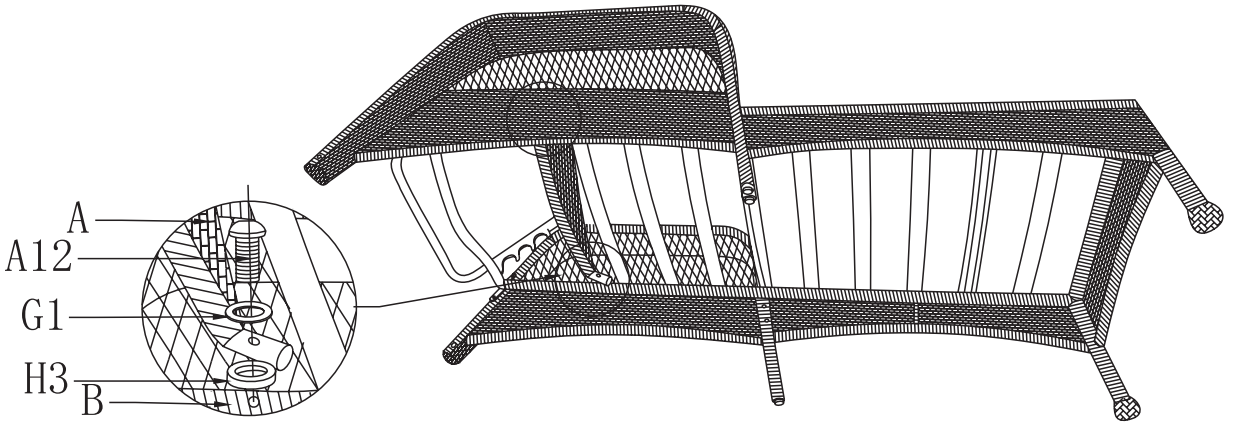

Step 6 – Attach the axle (F), axle sleeve (G) and wheels (H) to the right arm (C) by using plastic spacer (H6) and Nut cover (J2).

Hardware Used	
Plastic spacer (H6)	2pcs
Nut cover (J2)	1pc

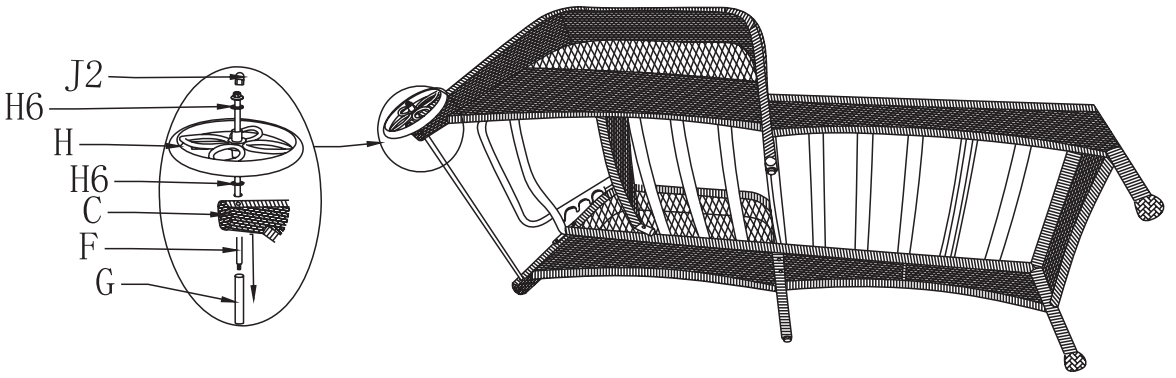

Step 7 – Attach the axle (F), axle sleeve (G) and wheels (H) to the left arm (D) by using plastic spacer (H6), locknut (I5) and nut cover (J2).

Hardware Used	
Plastic spacer (H6)	2pcs
Locknut (I5)	1pc
Nut cover (J2)	1pc

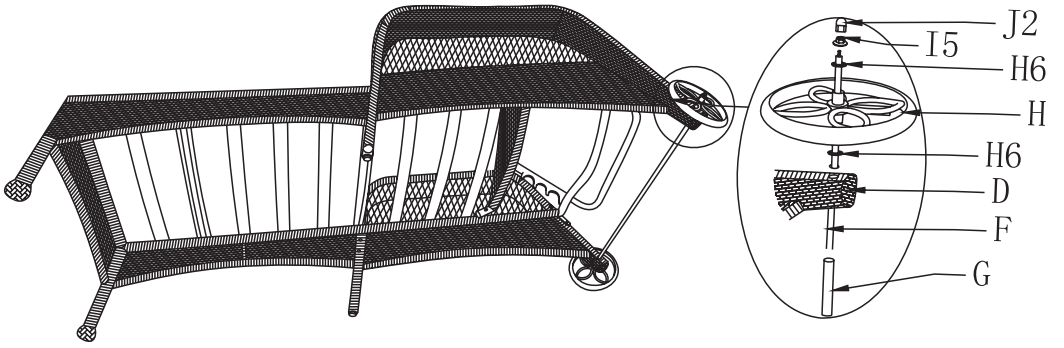
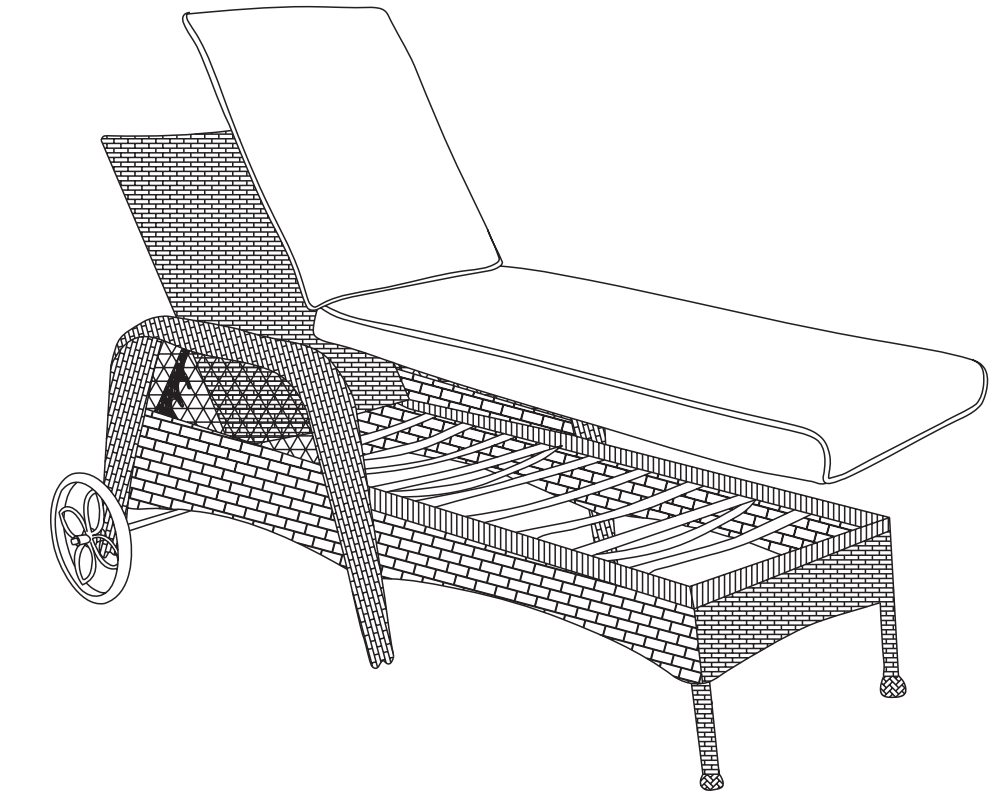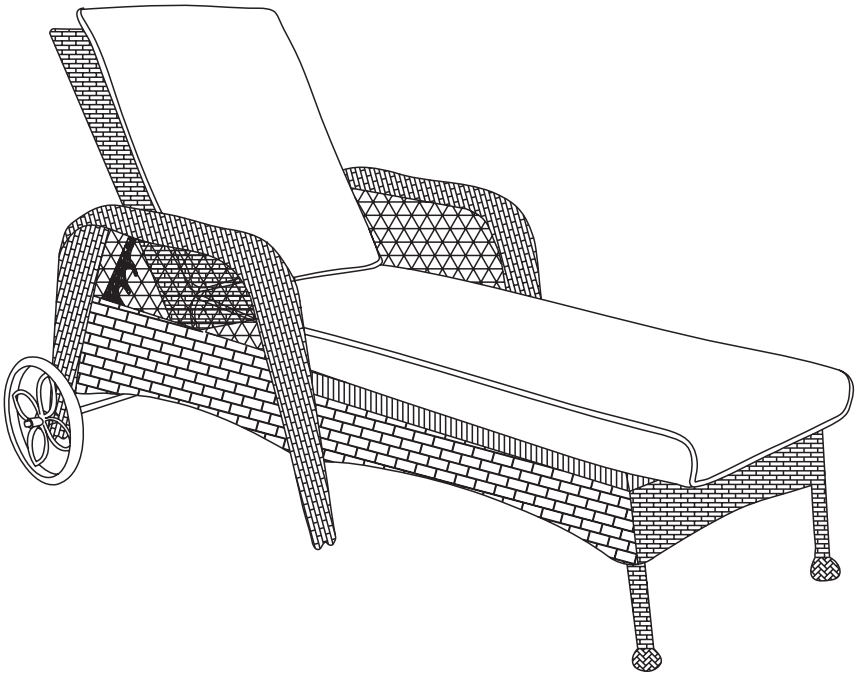
Step 8 – Put on the cushion (E) fixed by velcro.